LSBM4 Part List
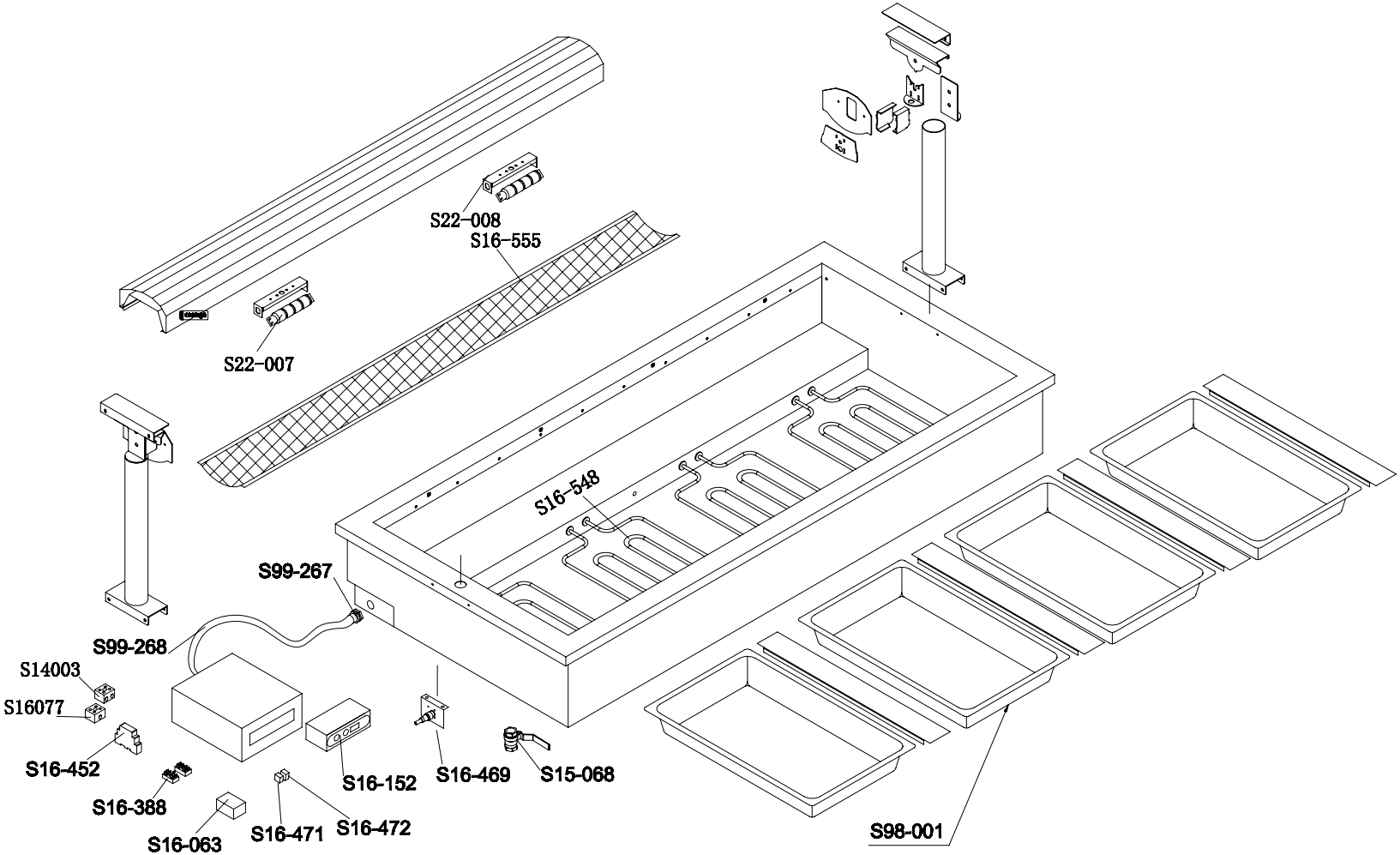
Part No	Name	Qty
S15-068	BRASS VALVE	1
S14-003	CONNECTOR	3
S16-077	CONNECTOR	2
S16-063	BREAKER	1
S16-152	THERMOSTAT	1
S16-555	NET	1
S16-388	TERMINAL BLOCK	2
S16-452	CIRCUIT BREAKER	1
S16-469	CONNECTOR,3-PIN	1
S16-471	POWER SUPPLY BUTTOM	1
S16-472	LAMP BOTTON	1
S98-001	GN PAN	4
S99-267	TUBE SETTING	2
S99-268	WIRING TUBE	2
S16-548	HEATER	4
S22-007	HALOGEN LAMP	2
S22-008	HALOGEN LAMP HOLDER	2